Product Data Sheet
оЛ Ôdz# ŦÛ# {úŀyŘŀШŘ CtŀYYŀõtŜ {úƨШŀƎŜ CШŜŜÎŜШ ØлÚK
b ŀúdzÜŀf wŠŦШƎŜШŀyûá

BSIπ I /πCC{πoл

Product Description

¢Kłá ŦŀŀYYŀõtŜ áúƨШŀƎŜ ŦШŜŜÎŜШ 2ŦŦŜłá ŀ· áŜÔdzШŜ áƨŦdzúƨ2yŦƨШ áúƨШyƎ Ø2ŀŀúŦŜ YŀúŜШŀŦá łyŦŀõƨШŀúƨШë ŀyŘ łyŘdzáÚШŀf áŜÚúyƎáł ¢Kłá YƨŘŜŦ YŜŜúá bCt !
ŀyŘ h{ I ! ƎdzłŘŜŦłyŜá np ŀyŘ тл ŦƨШ úKŜ ШŜŦШƎŜШŀúŜŘ áúƨШŀƎŜ ƨŦ ŦŀŀYYŀõtŜ óØƨŀúŦŜù YŀúŜШŀŦá łyƎŜyŜШŀf ŀŀõƨШŀúƨШë ø2Ш] ŀШŜŀáł LúÁ úŜYLJŜШŀúdzШŜ
Ô2yúШƨŦłá LJƨøŜШŜŘ öë YŀÔШƨLJШƨÔŜááƨШ úŜÔKyƨŦƨ2ƎƨŦ LJШƨúŜÔúłyƎ áŀYLJŦŜá Ř2øyŦúƨ πнpc/ł ! áŜШŜá 2Ŧ łdzŘłõtŜ ŀyŘ ØłádzŀŦ ŀŀŀШYá áŀŦŜƎdzŀШŘá áúƨШŜŘ
Ô2yúŜyúá# ¦úłłÎłyƎ KëŘШƨÔŀШõƨyШŜŦШƎŜШŀyúáŦ úKłá dzyłú ŀŦá2 YŜŜúá 9t ! {b ! t Ô2YLJłŀŀyÔŜŦ LJШƨúŜÔúłyƎ ŜyØШƨ2yYŜyúŀf áŀŦŜúë# ² łúK tƨø ŜyŜШƎë
Ô2yØdzYLJúƨyŀyŘ KƎK áŀŦŜúë áúŀyŘŀШŘáŦ úKłá ŦШŜŜÎŜШ łá łyŜŦŦłÔłŜyúŀ ŀyŘ ŘŜLJŜyŘŀõtŜ áƨtdzúƨyŦƨШ úKŜ áŀŦŜ áúƨШŀƎŜ ƨŦ ŦŀŀYYŀõtŜ áƨzõáúŀyÔŜá#

Images

Certifications

c UL us

General Description and Application	
Storage capacity (cu. ft)	30 Cu. Ft.
Door	One (1) solid swing, right hinged; stainless steel door handle; magnetic door gasket
Shelves	Four (4) fixed evaporator shelves
Mounting and Installation	Leveling legs
External probe access	3/4" probe access port on rear wall
Insulation	EPA compliant high density urethane foam
Exterior materials	Powder coated steel
Access control	Keyed door lock
General warranty	Two (2) year parts and labor warranty
Compressor warranty	Five (5) year compressor parts warranty
Product Weight (lbs)	300
Shipping Weight (lbs)	330
Rated Amperage	3.3 Amps
Power Plug/Power Cord	NEMA 5-15P plug, 6 ft long cord
Facility Electrical Requirement	110 - 120V AC, 15A breaker, NEMA 5-15 receptacle
Agency Listing and Certification	UL listed per UL 60335-1 and UL 60335-2-89 standards; c UL listed per CSA C22.2
	No. 120 standardÏ ¦ yúá YŜŜú bCt ! ƎdzłŘŜŦłyŜá np ŀyŘ тл ŦƨШ ŦŀŀYYŀõtŜ YŀúŜШŀŦá

Performance	
Uniformity (Cabinet air)	+/- 3°C
Stability (Cabinet air)	+/- 3°C
Maximum temperature variation (Cabinet air)	7°C Total
Energy Consumption (kWh/day)	4.9 kWh/day
Average Heat Rejection (BTU/hr)	690 BTU/hr
Pull down time to nominal operating temp	65 min (empty)

Refrigeration System	
Compressor	Hermetic, variable speed
Refrigerant	EPA SNAP compliant R290 propane
Condenser	Static - exterior walls of cabinet with auxiliary fan
Evaporator	Evaporator shelves
Defrost	Manual defrost

Controller, Configuration, Alarms and Monitoring	
Controller technology	Microprocessor temperature controller with variable frequency compressor control
Adjustable Temperature Range	-15° C to -25° C
Display Technology	Digital temperature display, sample simulated digital temperature display; .1° resolution
External alarm connection	Remote alarm contacts
Alarms	Audible and visual high/low-temperature alarms, Door ajar alarm, Remote alarm contacts
Display Probe	Product simulator bottle with glass bead media
Disclaimers	Defrosting of the unit will need to be performed periodically to prevent severe ice build-up. Indoor use only, +18° C to +26° C (+65° F to +78° F), <70% RH Specifications are subject to change. Equipment requires 4" of clearance around back and sides of the unit for proper ventilation – improper installation will void the warranty and will lead to temperature maintenance issues, overheating and possible failure. Performance claims are based on testing at 22°C ambient using unbuffered air temperatures in an empty freezer at steady state operation. Performance may vary with environmental conditions, product load, or door openings.

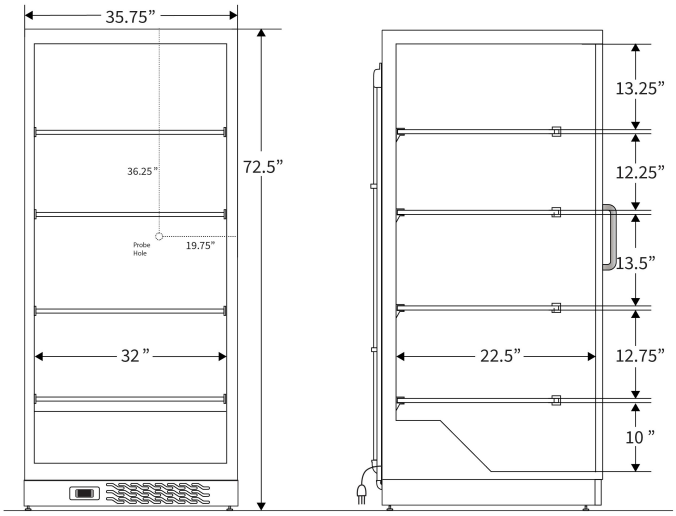

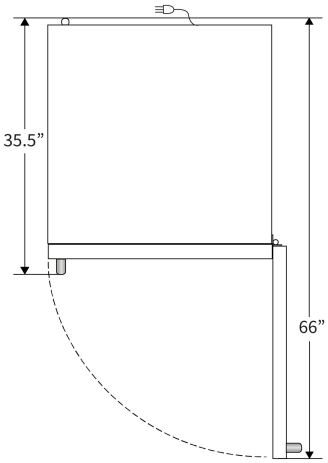

Contact		
Customer Service	866-674-7220	info@bsilab.com

Rev_02.17.2026